Model TXD
Cutaway Diagram

JencoFan
A Tradition of Quality

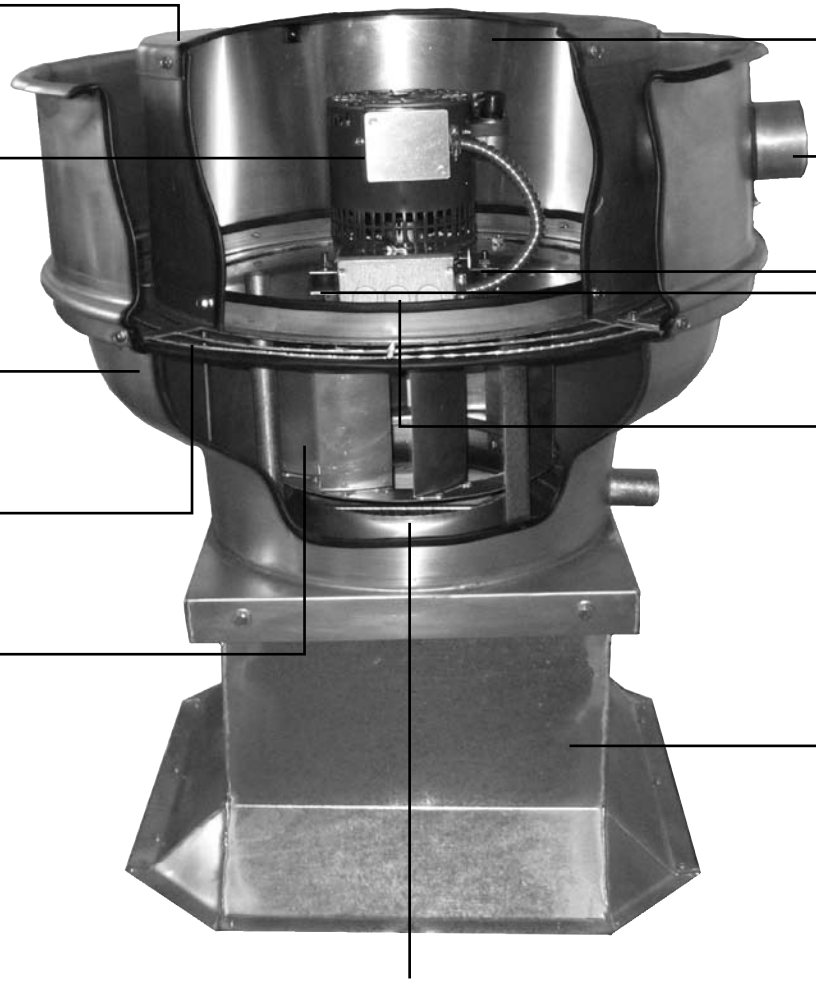

Spun Top
Easily removable for servicing.

Motor
Open drip-proof construction standard. 1 year warranty.

Spun Shroud
Provides maximum air performance.

Integral Birdscreen
Standard on non-UL762 units.

Centrifugal Wheel
Nonoverloading, backward inclined tapered blades for maximum efficiency and minimum sound.

Grease Grabber
Grease containment system (optional).

AMCA Air & Sound Licensed.

Deep Spun One Piece Inlet
For optimum air and sound performance.

Enclosed Motor Compartment
Isolates motor from exhaust air.

Oversized Vent Tube
For maximum motor cooling.

Neoprene Isolators
Reduce vibration and sound.

Mounted Disconnect Switch
Standard with single speed drip-proof motors.
(External disconnect on UL762 units).

Prefabricated Roof Curb
(Optional).

Special Wall Mount Bracket
Optional on TXD fans.

Stainless Steel Exterior Fasteners Standard.

Soler&Palau Ventilation Group