Model UBS
Cutaway Diagram

JencoFan
A Tradition of Quality

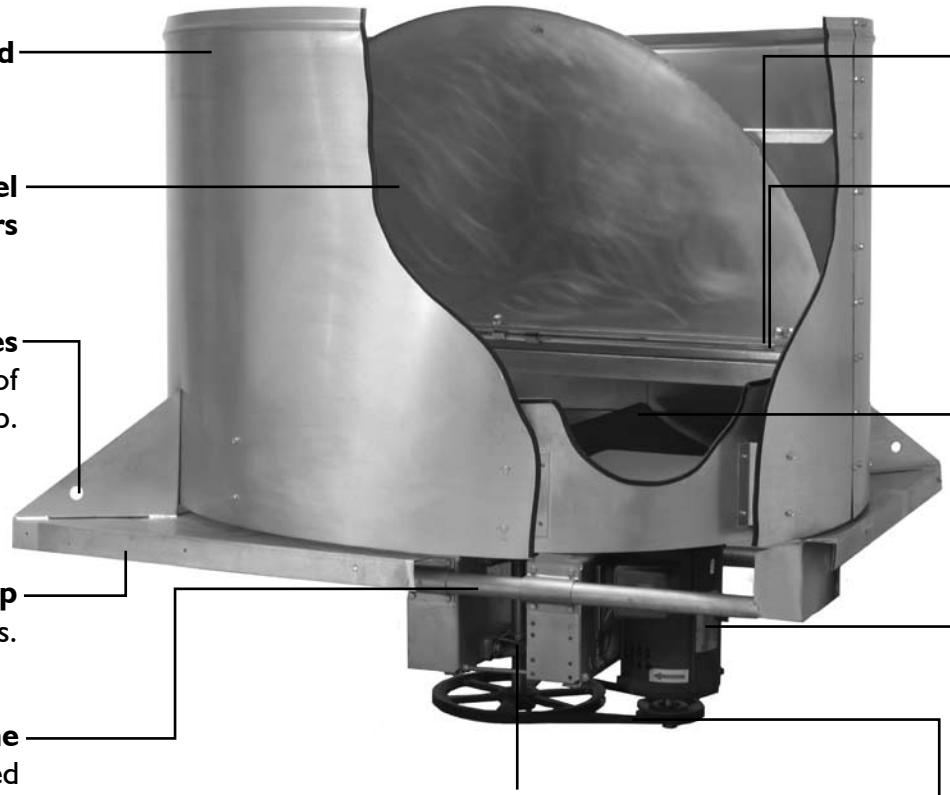

Galvanized Steel Windband

Galvanized Steel Butterfly Dampers

Lifting Eyes
At All Four Corners of Curb Cap.

Galvanized Curb Cap
With Fully Welded Corners.

Frame
Heavy Galvanized Schedule 40 Pipe.

cULus Listed - Standard 705
(optional)

Cast Iron Pillow Block Bearings
With Lube Fittings. Average Life of 200,000 Hours.

Damper Rod
Stainless Steel.

Rain Channel
Integral Galvanized Steel.

Propeller Blades
Die Formed Epoxy Coated Steel.

Steel Hub Plate Heavy Epoxy Coated. Keyed to Fan Shaft.

Motor
Nationally Recognized and Locally Serviced. ODP is Standard.

V Belt Drive
With Adjustable Motor Sheave (Standard through 3HP).

c UL US
Standard 705

Soler&Palau Ventilation Group